Installation and Use Instructions for Stainless Steel Bathing Tub

BTS-130E/131E

BTS-130E is lift-up door，BTS-131E is sliding door



Schematic diagram of accessories

1 Shaped ring*3

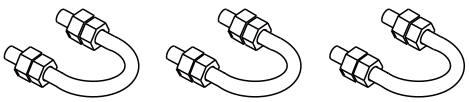

7 Booster & Grate for Bathing Tubs

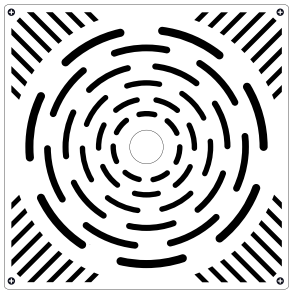

2 Drain Suite

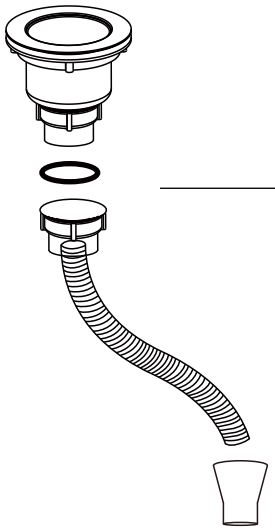

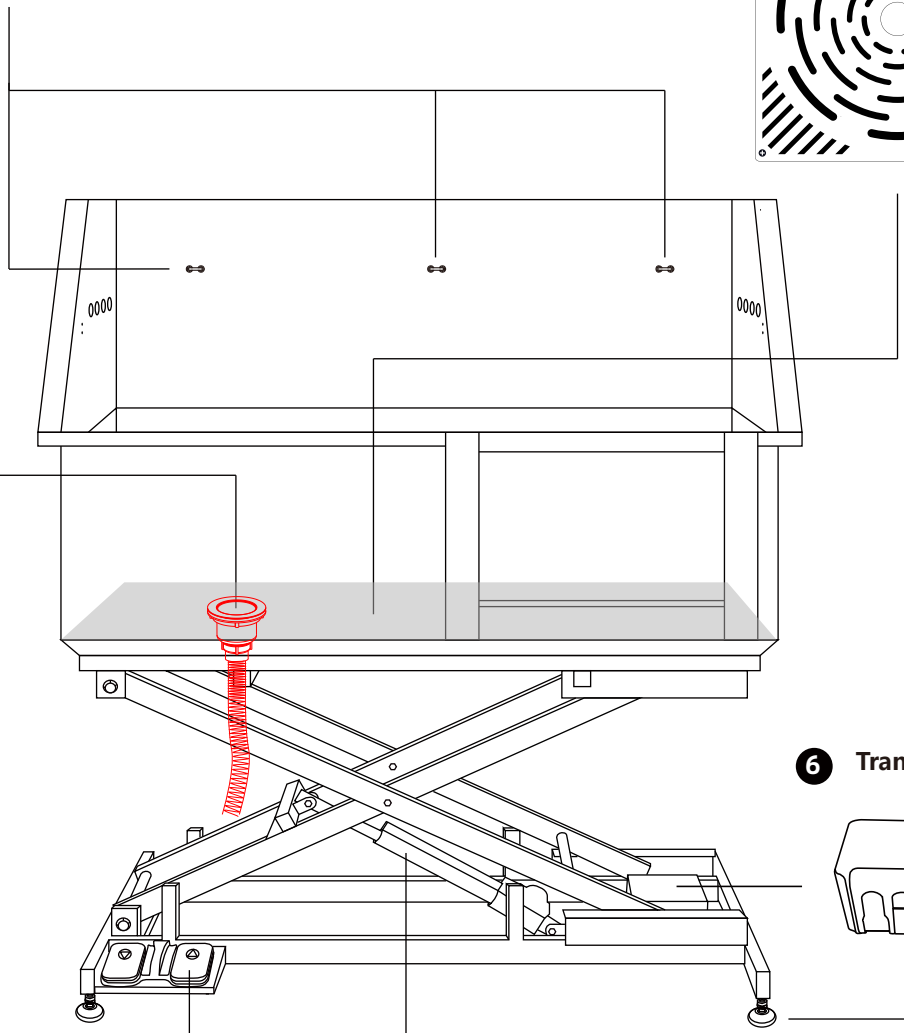

6 Transformer

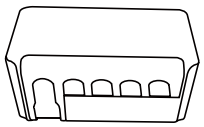

3 Foot pedal

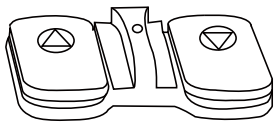

5 Adjustable feet*4

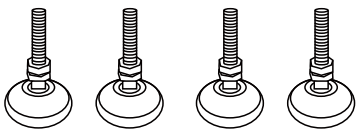

4 Linear actuator 220



Accessories

List	Model No.	Spare Parts Name	quantity
1	BTS-T001	Shaped ring	3
2	BTS-T002	Drain Suite	1
3	BTS-T003	Foot pedal	1
4	BTS-T004	Linear actuator 220	1
5	BTS-T005	Adjustable feet	4
6	BTS-T006	Transformer	1
7	BTS-T012	Booster & Grate for Bathing Tubs	1
8	BTS-T007	Scouring pad	1

The following accessories need to be installed by oneself

❶

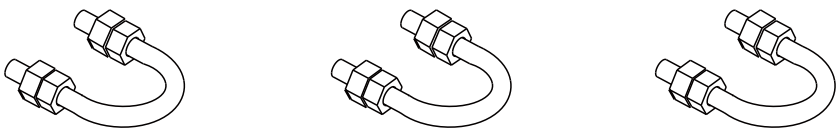

Shaped ring*3

❷



Rubber seal*1 **Hose connector*1** **Hose*1**

After receiving the product, please first check if the packaging is severely damaged.Open the packaging and check if the accessories are complete.If there are any quality issues with the product.

Installation instructions

The installation of the hook on the back panel of the tank is shown in the following figure

Pass the hooks through tub backplate and tighten up the screws on the back.

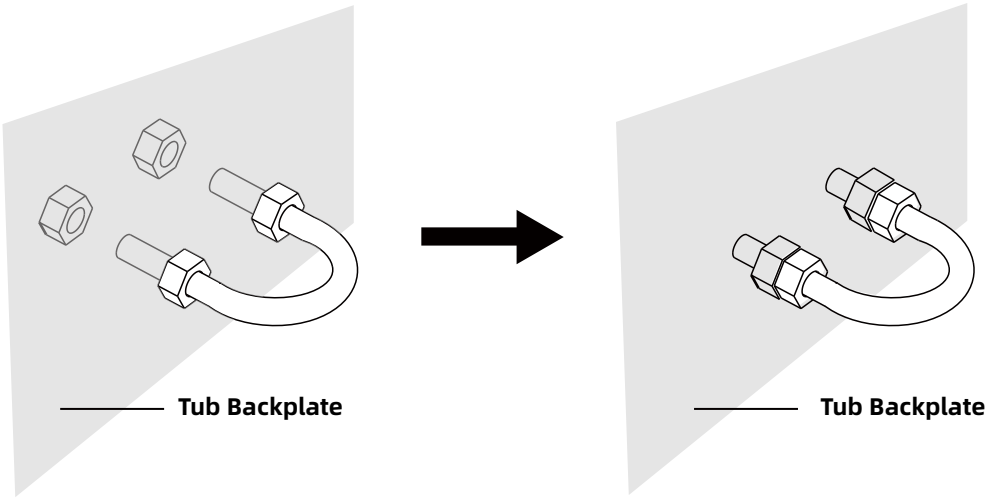

The installation of drain as shown on the right:

① Remove the cap from the drain and put it through the reserved hole on the tub.
② Put the cap back to the drain from the bottom of tub and tighten it clockwise.
③ Put the rubber seal on the hose connector and turn it into the drain and tighten it.
④ Put the hose connector on the hose.

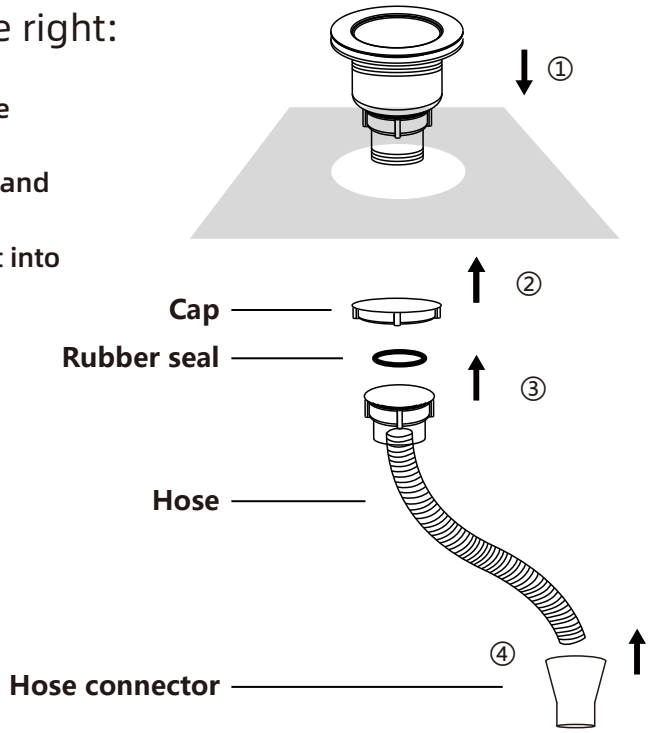

Parameter

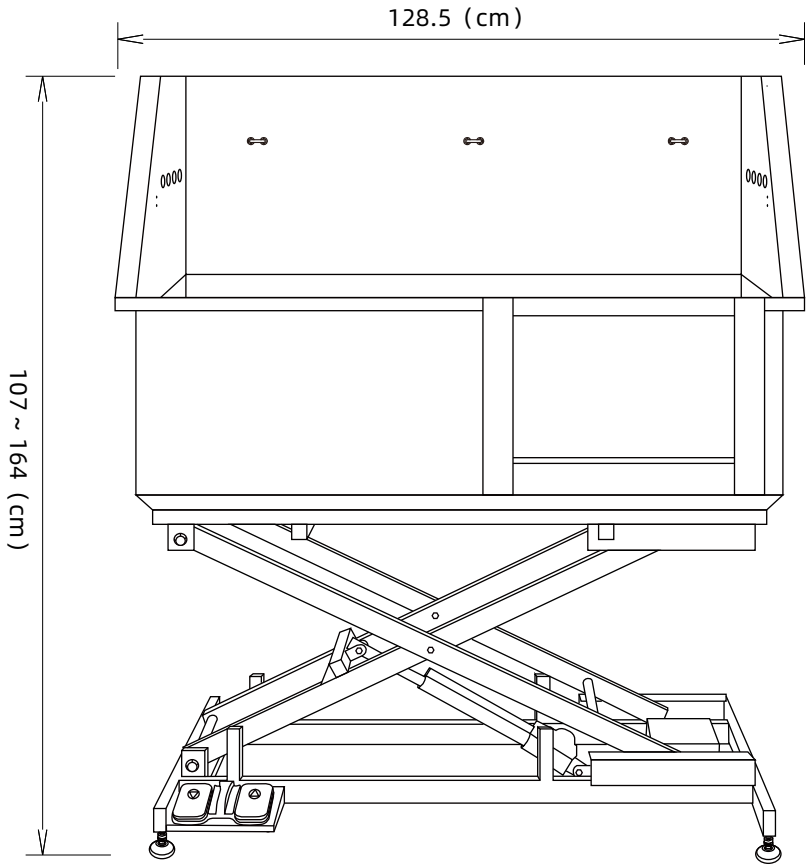

Front view

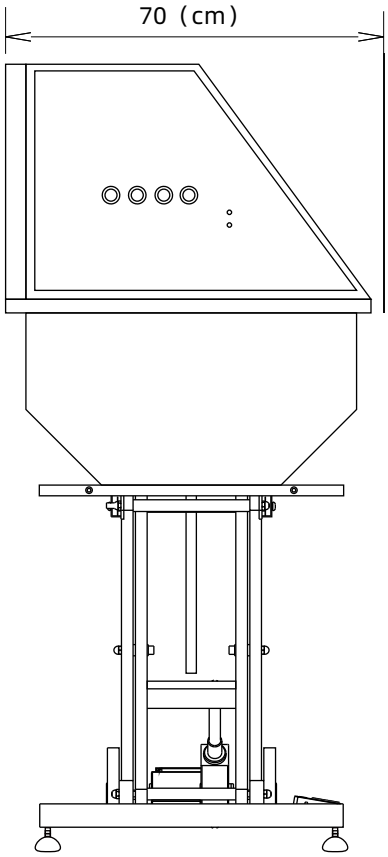

Side view

Type: BTS-130E/131E			
Net weight(kg)	101.4	Grass weight(kg)	137
Voltage	110-240V	Four/six split water pipe interface	
Product dimensions (cm)	128.5×70×107-164	Package dimensions (cm)	142×81.2×84H

Dimensional Diagram

Plan view of tub bottom

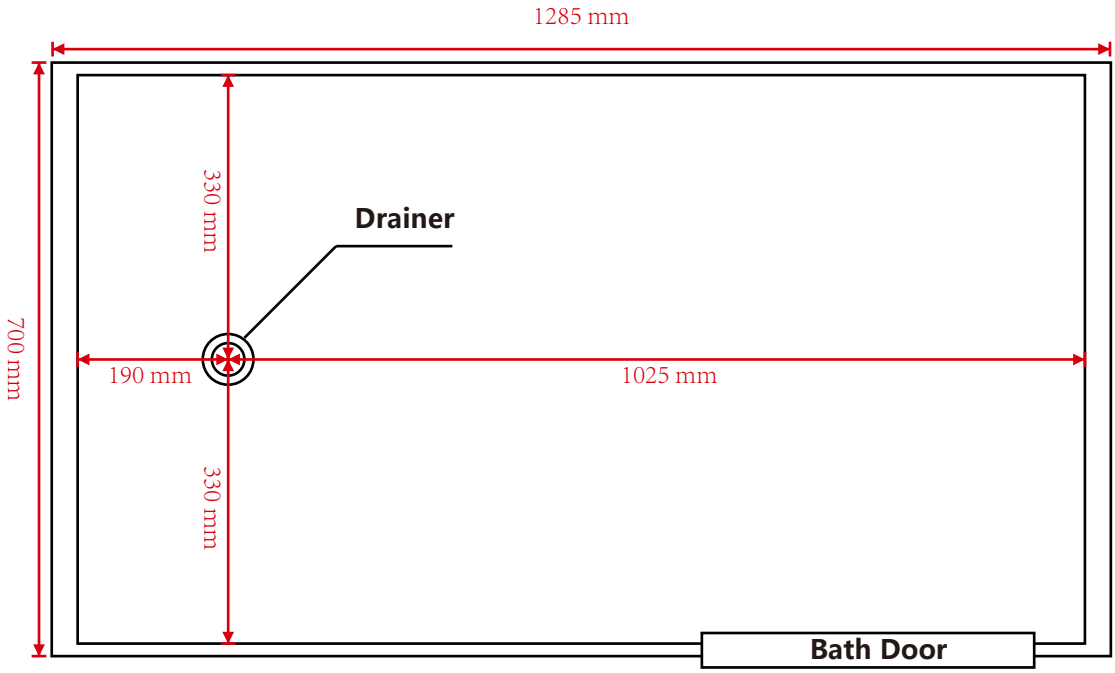

Plan view of triangular baffle

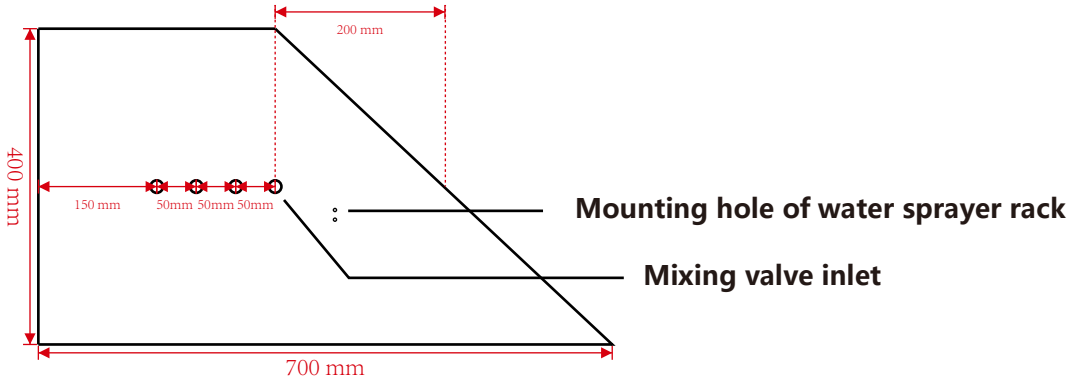

Plan view of backboard

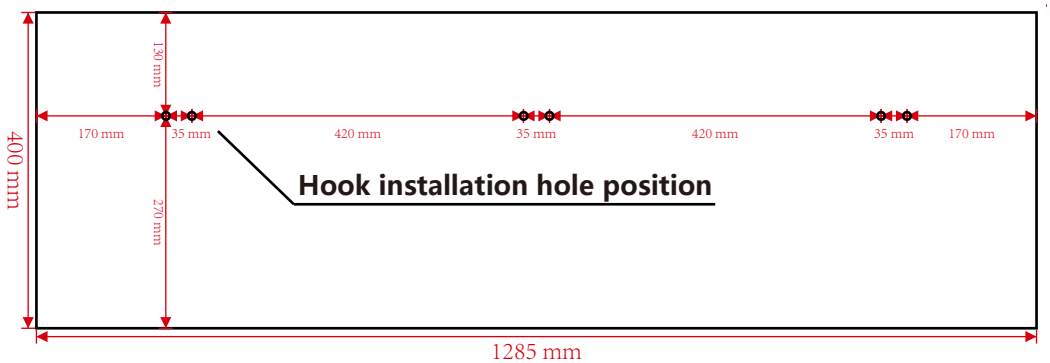

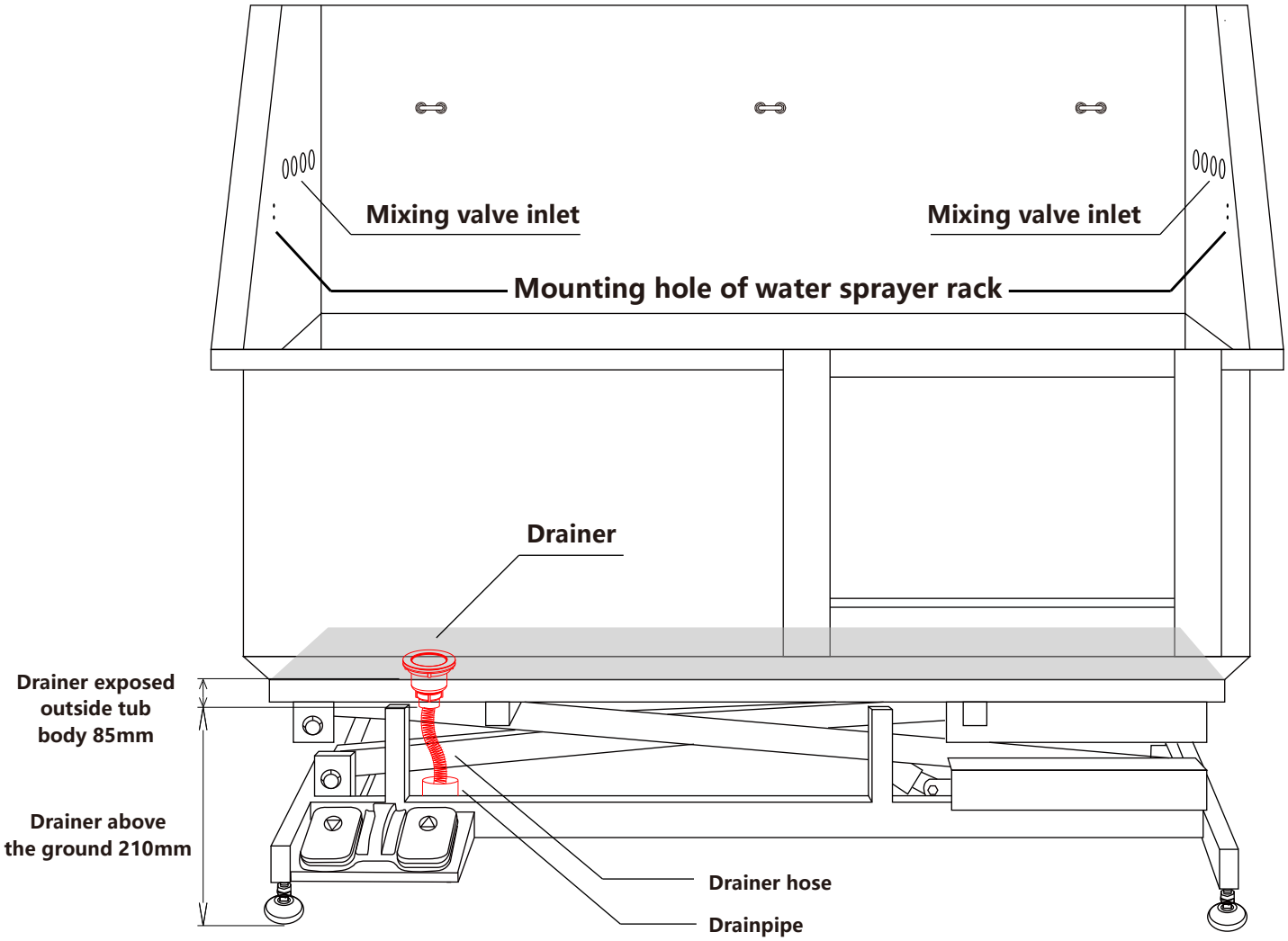

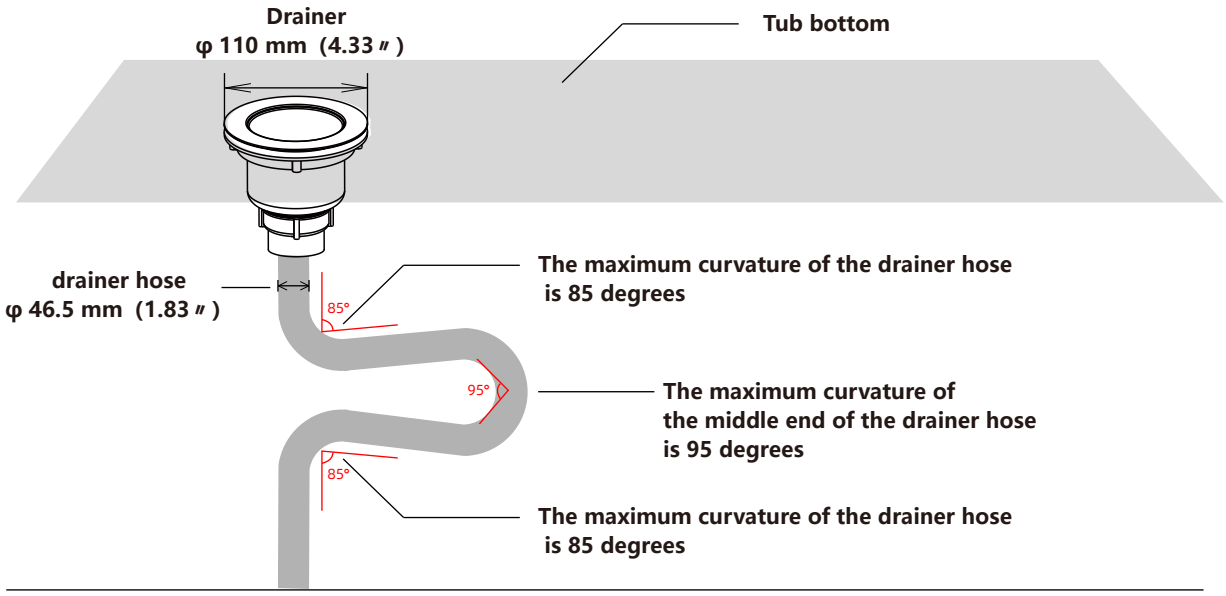

Do not exceed the maximum angle of the drainer hose, otherwise it will bend and affect the drainage effect.

Instructions for use

Instruction of foot pedal as below:

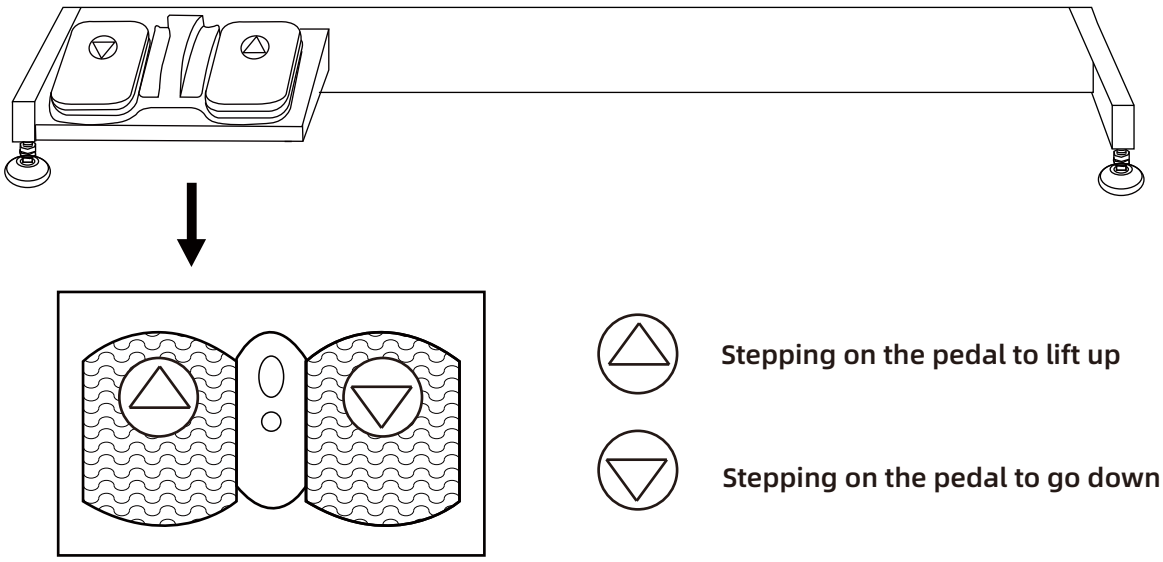

Stepping on the pedal to lift up

Stepping on the pedal to go down

Adjust the leveler as below:

Rotate the leveler to a suitable height

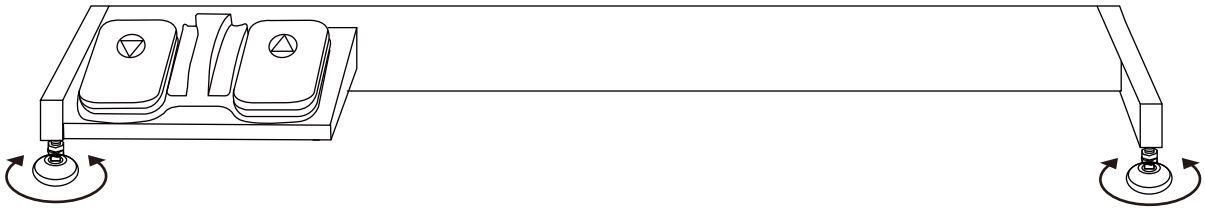

Purposes of scouring pad

Rust removal, cleaning, can remove rust spots, dirt, and oxide deposits on the surface of the bathtub

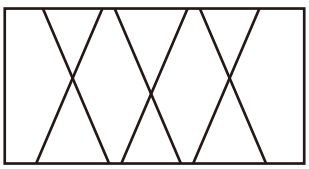

Pet anti slip pedal assembly retrieval and placement method:

Firstly, both anti slip pedals are placed in parallel,
Then, the anti slip booster pedal is stacked on top of the anti slip pedal
(the removal sequence is reversed from the insertion sequence).

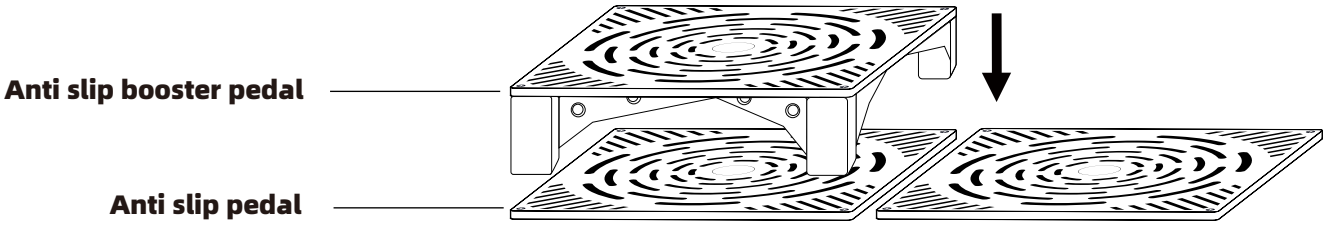

The use of drainer is shown in the following figure

If you need to remove the filter basket, you need to first remove the anti slip pedal before exposing the filter basket of the drain

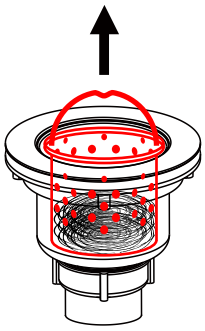

Pull out the handle from the drain and lift out the filter basket

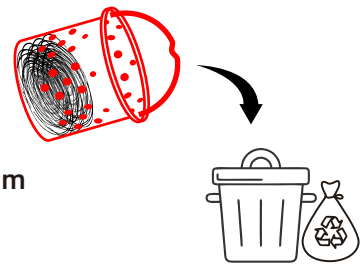

Regularly clean the filter basket, otherwise it will affect the drainage effect

The use of the ALCI is as follows:

Max load power 3000w，IP grade IPX4

Press down the button to disconnect

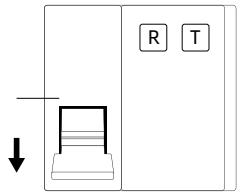

Press up the button to connect

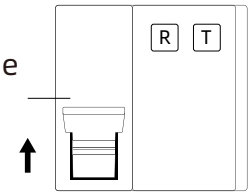

R Press it before close “ R ” T Press once per month

The placement and use are shown in the following figure:

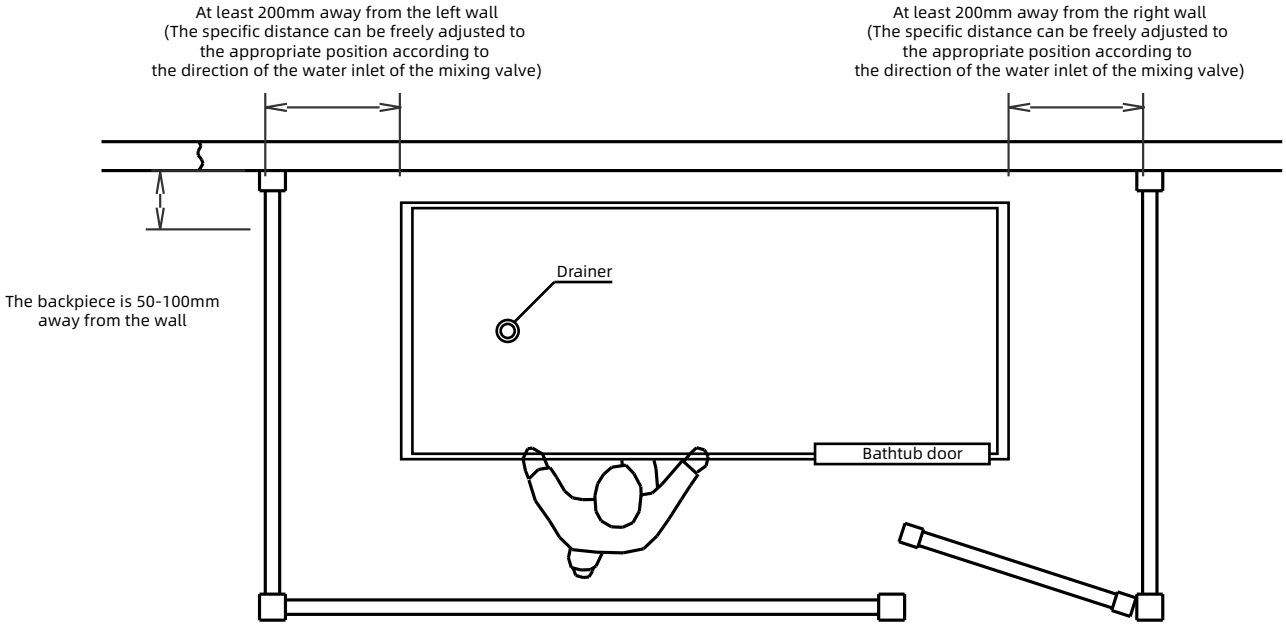

⚠ Note

1. This product is not intended for use by individuals (including children) with physical disabilities, delayed reactions, or mental disorders, unless there is the guardian shall supervise and guide the use of this product from the sidelines, and shall be responsible for the safety of the user;
2. Please do not let children get close to the lifting range of this product to prevent accidents.
3. Please do not disassemble it yourself if there are any abnormalities or malfunctions during use.
4. Do not contaminate with corrosive liquids or solids.
5. If you need to clean the frame and electric parts, you can use a dry towel and a hair dryer to remove any remaining hair on the surface,excrement, water stains, and other dirt.